XKs Unlimited, Inc.
850 Fiero Lane
San Luis Obispo, CA 93401
805-544-7864
email: customerservice@xks.com

Instruction Sheet for part 06-0032:
Wilwood Caliper Conversion Kit, XK-120 & XK-140

This kit essentially replicates XK-150 front disc brakes on the XK-120 and XK-140 but with the obvious difference of Wilwood calipers in place of the original Dunlop calipers.

This kit is intended for the professional or experienced home mechanic. For the most part, it is a "bolt-off, bolt-on" kit, but you must be prepared to properly press the wheel bearing races into the splined hubs, set the correct wheel bearing "float" and bleed the hydraulic system. If you are unsure of your ability to perform these operations, please seek more experienced help before beginning.

We have provided an "orientation" illustration of how the various brackets are assembled in addition to a materials list – we realize a bag of hardware can be a bit confusing at first, but armed with the sizes listed it should be simple to get your bearings.

Assembly notes:

For the XK-150, Jaguar specified .003" to .005" of end float for the front wheel bearings. They describe the adjustment procedure thusly:

> *Adjustment of the front wheel bearings is by means of the hub nut which should be tightened until there is no end float, that is, when the rotation of the hubs feels slightly "sticky." The hub nut should then be slackened one castellation (aka one "flat") and the split pin inserted in the nearest hole.*

To seal the brake hose threads into the alloy caliper housing, we recommend Permatex "High Performance Thread Sealant," part number 56521. It should be available at any auto parts store.

Be sure to completely flush the hydraulic system of old fluid prior to installation. We do not recommend the use of silicone brake fluid.

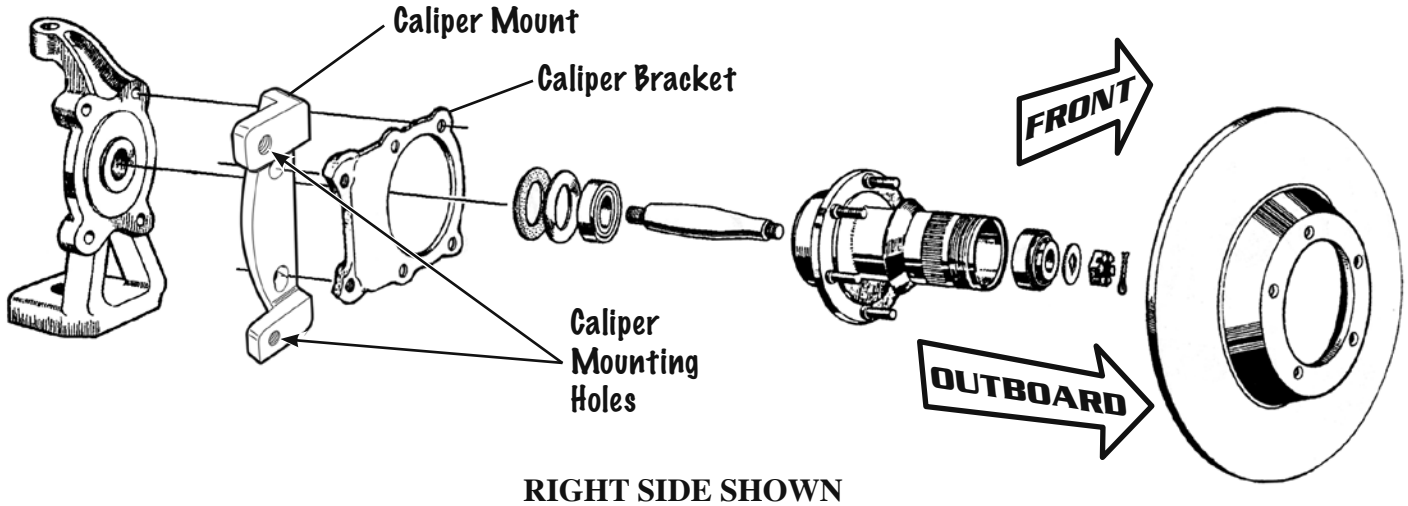

RIGHT SIDE SHOWN

Instruction Sheet for part 06-0032:
Wilwood Caliper Conversion Kit, XK-120 & XK-140

Materials List -- 06-0032 Wilwood Caliper Conversion Kit, XK-120 & XK-140

Quantity	Part Number	Description
1	CO-12928	Splined Hub, Right
1	CO-12929	Splined Hub, Left
2	CO-12930	Caliper Bracket, CNC-machined Steel
2	CO-3076/1	Zerk Fitting (screws into splined hubs)
2	CO-615	Felt Hub Seal
2	JA-L.104/10U	Cotter Pin, Spindle Castle Nuts
2	ZZ-MOUNT	Caliper Mount, CNC-machined Alloy
2	ZZ-120-6808	Wilwood Caliper (same right or left)
1	ZZ-150-8850K	Wilwood Pad Set (street suitable)
2	06-0024	XK-150 Brake Rotor (same right or left)
2	14-1031	Wheel Bearing/race, Inner (race must be pressed into splined hub)
2	14-1032	Wheel Bearing/race, Outer (race must be pressed into splined hub)
10	14-1500	Hub Bolt Set (connects brake rotors to hubs; nuts are on outboard face)
4	ZZ-501-626R	Bolt, Caliper To Alloy Bracket
4	ZZ-8072-031R	Washer, Flat, Caliper To Alloy Bracket Bolts
4	ZZ-8077-031R	Washer, Lock, Caliper To Alloy Bracket Bolts
4	ZZ-401-680B	Bolt, C12930 Caliper Bracket To Upright, Lower, 7/16" X 2-3/4"
4	ZZ-91257A708	Bolt, C12930 Caliper Bracket To Upright, Upper, 7/16" X 3-1/4"
8	ZZ-8072-032R	7/16" Flat Washer On Above Bolts
8	CO-24119-4	7/16" Nylock Nuts On Above Bolts
4	ZZ-92620A745	Bolt, 1/2" X 1-1/4", Alloy Caliper Bracket To C12930 Steel Caliper Bracket
4	ZZ-8073-033R	1/2" Flat Washer, On ZZ-92620A745 Bolts
4	JA-FG.108/X	1/2" Lock Washer, On ZZ-92620A745 Bolts
2	ZZ-9925	Anti-seize Paste Packet (steel bolts to alloy brackets)
1	ZZ-9960	Brake Hose Kit, two front and one rear hose